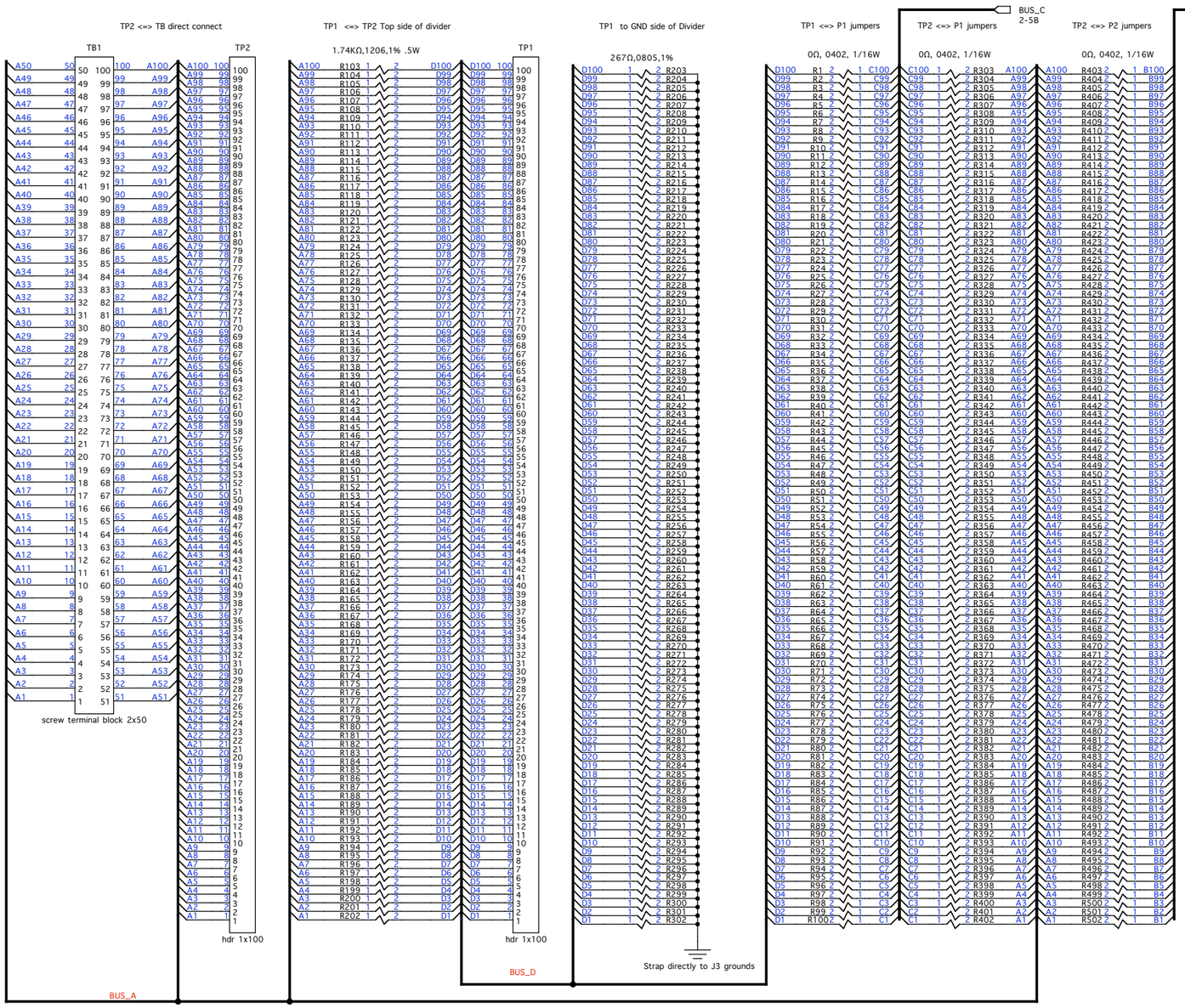

10-2002-1003

Rev A - 1/1/02 initial design
Rev B - 1/1/04 minor clean-up
Rev C - 7/3/13 Add resistor option between TP1 & TP2 plus pull-downs from TP2 to allow for voltage divider option. Switch to 0402 discretes for primary connection. Add connector relief cuts in fab, increase width to match new plastic vendor. Redraw Schematic to mimic layout. Add Power and ground planes for impedance matching.

NOTES:
1. 1,51 2,52 ... 50,100 are standard differential pairs
2. Standard build includes TB, P1, P2 and jumper sets A<=>C and A <=> B
3. Engineering Build has TP1, and P1 installed along with D <=> C no TB or P2
4. Voltage divider formed with TP1-TP2 upper resistor, D <=> GND lower resistor plus A<=>B jumpers and D <=> C jumpers with P2 signal input and P1 divided signal output. TB and TP installation per client requirements.

Please note that the installation of components will void the warranty on this product.
Resistors are paired by cable wire pair to allow parallel and series termination options.
"resistors" can be capacitors etc.
The wire-wrap posts allow interconnection [loop-back] of signals and other termination styles.
Dynamic Engineering offers an assembly service for those who wish to keep the warranty in effect.
Please e-mail your requirements to sales@dyneng.com

Dynamic Engineering
150 DuBois St. Suite C
Santa Cruz, CA 95060
831-457-8891
www.dyneng.com

Design: HDEterm100_revC1
Sheet:
Engineer: &Designer
Created: 1/1/04 12:00 AM
Modified: 7/17/13 11:10 AM
Printed: 7/17/13 11:12 AM
Sheet 1 of 3

NOTICE: This document contains proprietary information of Dynamic Engineering and is not to be copied or distributed without the written consent of an officer of Dynamic Engineering. The receipt or possession of this document does not convey any rights to reproduce it, disclose its contents, or to manufacture, use, or sell anything incorporating the concepts and details disclosed by it. Such concepts and details are not to be used other than for the benefit of Dynamic Engineering.

SHOW AC/DC/OPN OPTIONS IN SILK X2

Dynamic Engineering

150 DuBois St. Suite C
Santa Cruz, CA 95060
831-457-8891
www.dyneng.com

Design:	HDEterm100_revC1
Sheet:	
Engineer:	&Designer
Created:	1/1/04 12:00 AM
Modified:	7/17/13 11:10 AM
Printed:	7/17/13 11:12 AM
Sheet 2 of 3	

NOTICE: This document contains proprietary information of Dynamic Engineering and is not to be copied or distributed without the written consent of an officer of Dynamic Engineering. The receipt or possession of this document does not convey any rights to reproduce it, disclose its contents, or to manufacture, use, or sell anything incorporating the concepts and details disclosed by it. Such concepts and details are not to be used other than for the benefit of Dynamic Engineering.

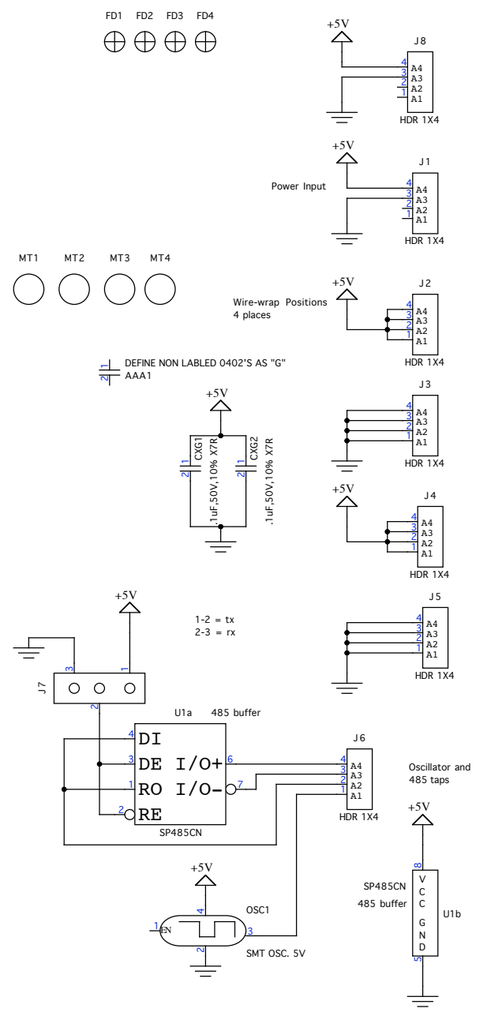

150 DuBois St. Suite C
Santa Cruz, CA 95060
831-457-8891
www.dyneng.com

Dynamic Engineering

Design:	HDEterm100_revC1
Sheet:	
Engineer:	&Designer
Created:	1/1/04 12:00 AM
Modified:	7/17/13 11:10 AM
Printed:	7/17/13 11:12 AM
Sheet 3 of 3	

NOTICE: This document contains proprietary information of Dynamic Engineering and is not to be copied or distributed without the written consent of an officer of Dynamic Engineering. The receipt or possession of this document does not convey any rights to reproduce it, disclose its contents, or to manufacture, use, or sell anything incorporating the concepts and details disclosed by it. Such concepts and details are not to be used other than for the benefit of Dynamic Engineering.